* The Blue, Black and Red wires is the bottom layer sol dered
* The Yellow wire is the top layer connection

Emitter and Receiver Circuit (Double)

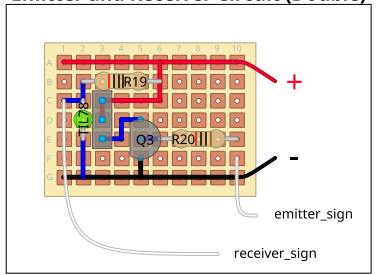

Signal Acquisition Circuit

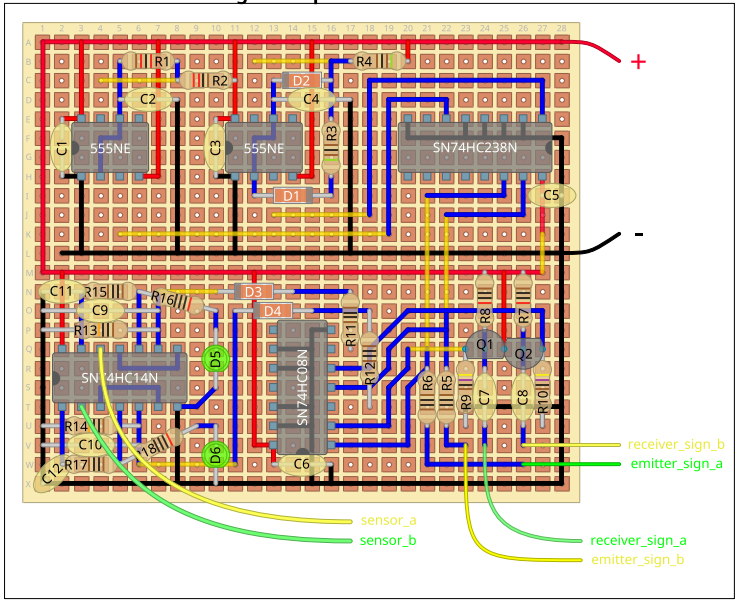
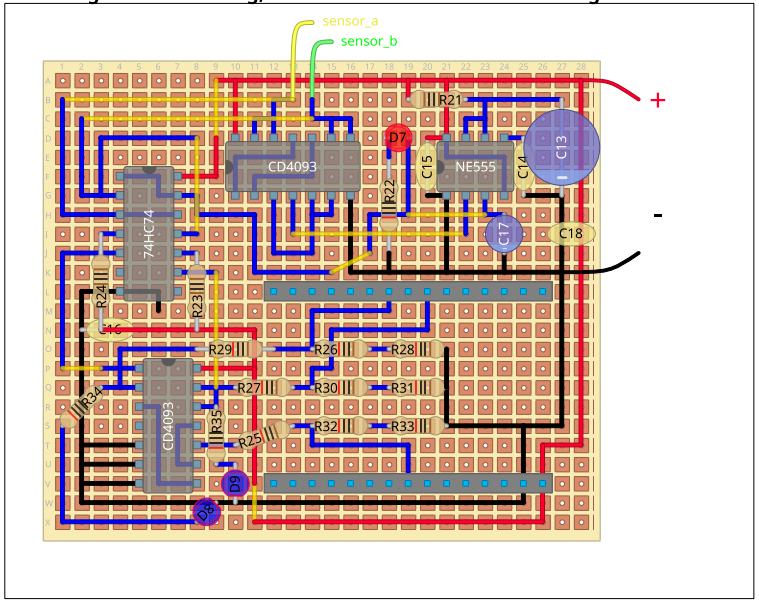
Signal Conditioning, Flow Identification and Processing Circuit